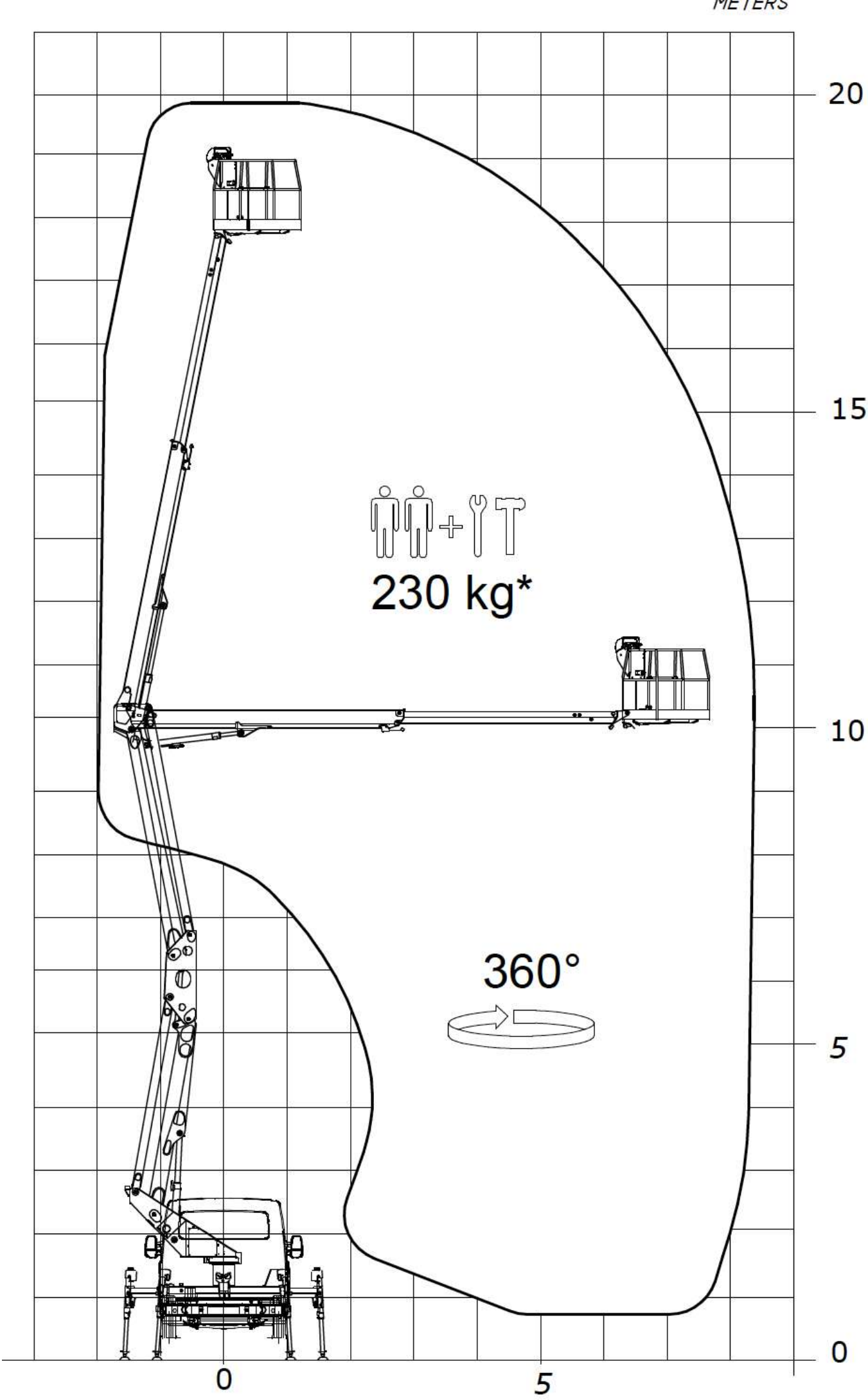
METERS
20
15
10
5
0
0
5
230 kg*
360°